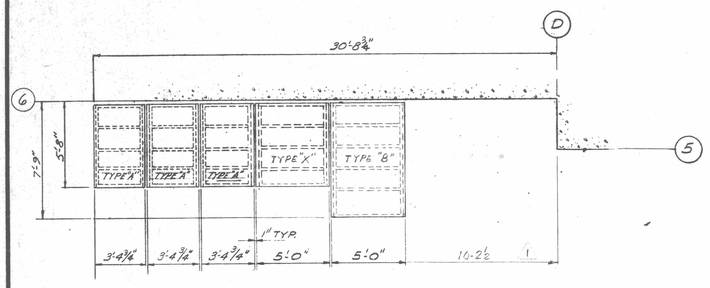

PLATFORM ARRANGEMENT PLAN
1/4" = 1'-0"

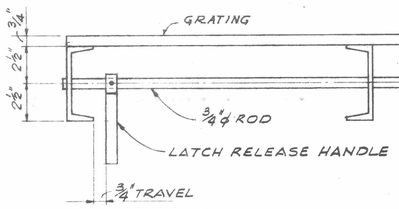

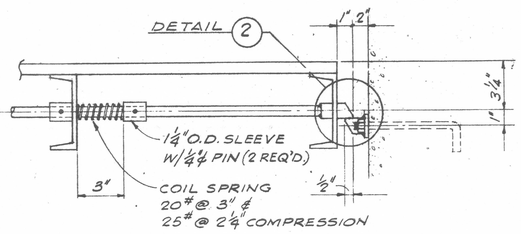

SECTION B TYPICAL
3" = 1'-0"

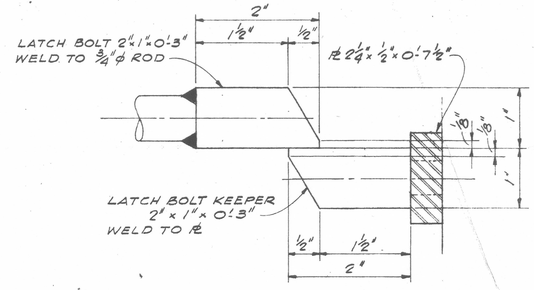

DETAIL 2 TYPICAL
FULL SIZE

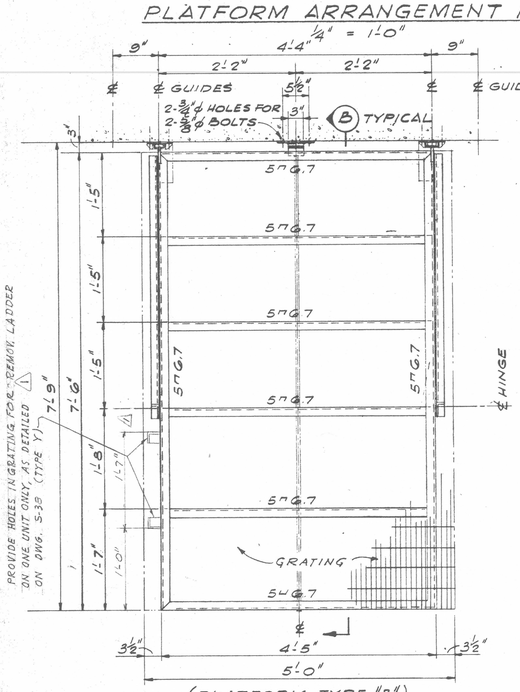

(PLATFORM TYPE "B")

PLAN
1" = 1'-0"

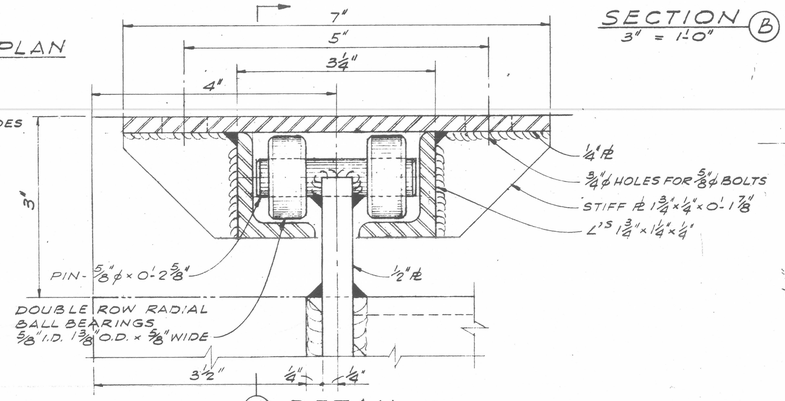

A DETAIL 1 TYPICAL
FULL SIZE

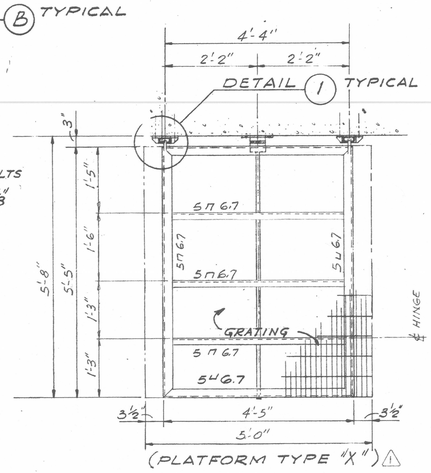

(PLATFORM TYPE "X")

PLAN
NO SCALE

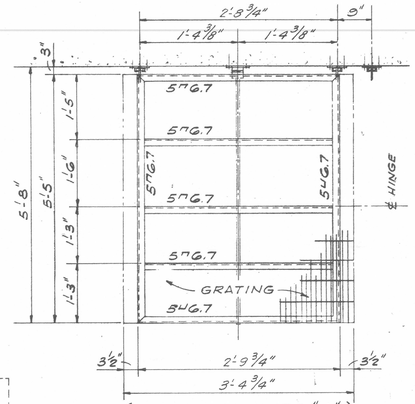

(PLATFORM TYPE "A")

PLAN
NO SCALE

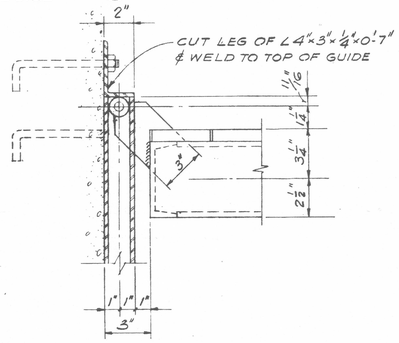

SECTION A
3" = 1'-0"

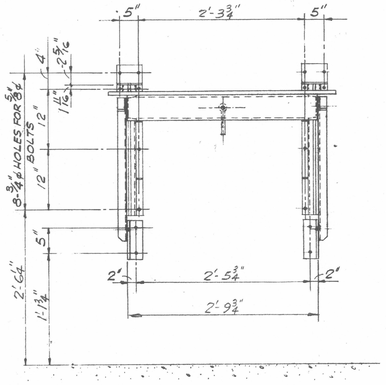

FRONT ELEVATION (TYPE "A")
NO SCALE

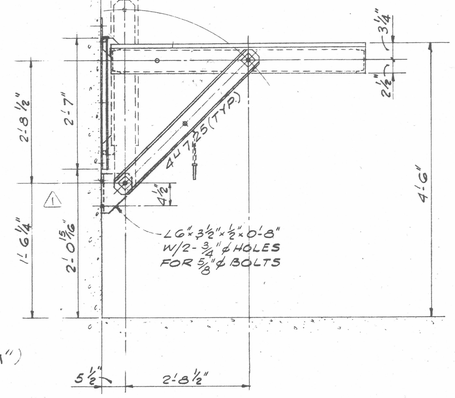

SIDE ELEVATION (TYPE "A")
NO SCALE

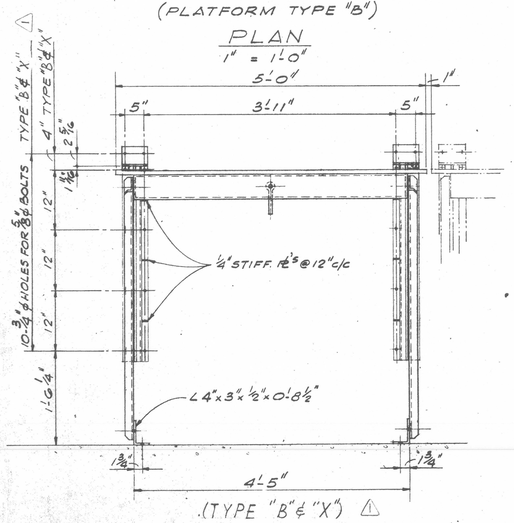

(TYPE "B" & "X")

FRONT ELEVATION
1" = 1'-0"

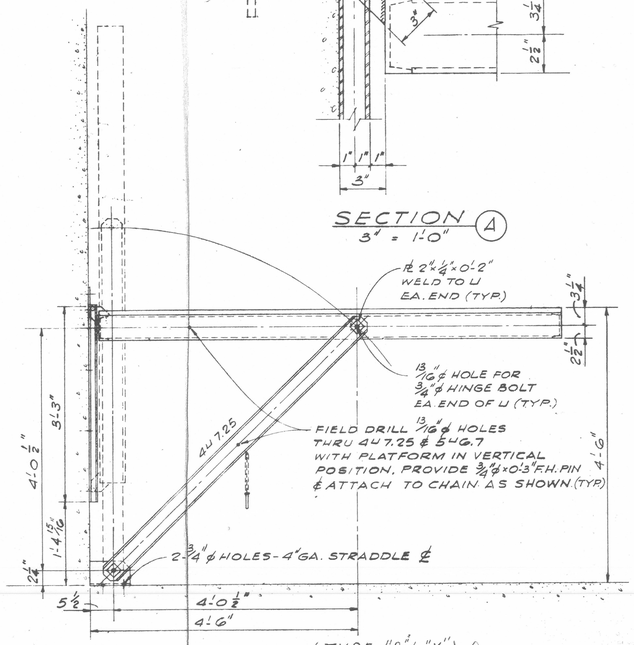

(TYPE "B" & "X")

SIDE ELEVATION
1" = 1'-0"

NOTES

1. ALL WELDS SHALL BE 3/16" AND CONTINUOUS UNLESS OTHERWISE NOTED.
2. STEEL GRATING - ¾" x 1/8" @ 4.9 #/□'
3. GRATING SHALL BE SPOT WELDED TO CHANNELS EVERY 6TH BEARING BAR & ALTERNATE CROSS BARS

1 0 2 4 6 8 10
½ IN = 1 FT.
1 ½ 0 1 2
1 IN = 1 FT.
1 ½ 0
3 IN = 1 FT.

FOR OFFICIAL USE ONLY

CHC DEC 1 1 1959
CE-AF MISSILES OFFICE
U.S. Army Engr. District, Los Angeles
REVIEWED FOR CORPS OF ENGINEERS
FOR THE CHIEF OF ENGINEERS
21 MAY 1959
CLIFTON H. CHAMBERLAIN, JR.
Lt. Col., Corps of Engineers
Assistant District Engineer (AFBMD)

BMD INDEX No. 501.8.1

REVISION	DATE	DESCRIPTION	AGENCY	INIT.
8	12-11-61	OPERATIONAL AS-BUILT DRAWING	BECHTEL	
2	5-12-61	CONSTRUCTION AS BUILT DRAWING	K.C.D.	
1	12-4-59	REVISED PLATF. PLAN. DELETED TYPE "C" ADDED TYPE "X"	BECHTEL	R.G.M.

BECHTEL CORPORATION
ENGINEERS AND CONSTRUCTORS
SAN FRANCISCO — LOS ANGELES — NEW YORK

DEPARTMENT OF THE AIR FORCE
AIR FORCE BALLISTIC MISSILE DIVISION (ARDC)
INGLEWOOD, CALIFORNIA

		DATE
DESIGNED BY	Polvi	1-30-59
DRAWN BY	LONG	1-30-59
CHECKED BY	BERRIEN	1-30-59
O.K.	GUSTAFSON	5-21-59
O.K.	Gleason	5-21-59
APPROVED	BECHTEL CORP.	5-21-59

WS-107 A-I OPERATIONAL BASE
FORBES A.F.B. KANSAS
COMPLEX D, E, F, G, H & I
LAUNCH & SERVICE BUILDING
SERVICE PLATFORM - SHT. 1

APPROVED FOR: Vernon L. Harbaugh, Captain, USAF — Chief, Ops. Div. — Ops. Engr. Div. — Ops. Engr. Div. — Project Officer — AFBMD

SPECIFICATION No.	ENG.-23-028-59-
DATE	21 MAY 1959
SCALE	AS NOTED
DRAWING NUMBER	3115-3 XI-S-32
SHEET	