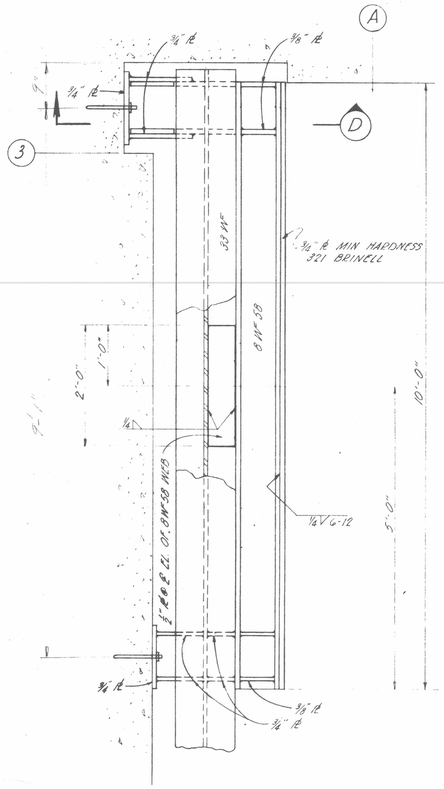

DETAIL 1 S-11
SCALE 1" = 1'-0" (S-37)

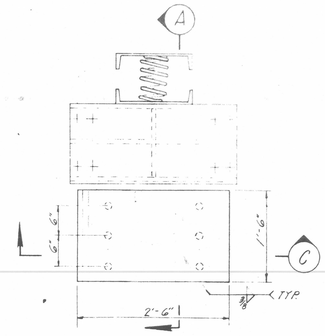

PLAN - TOP PLATE

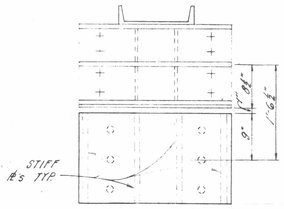

PLAN - BOTTOM PLATE

DETAIL 2 S-11
SCALE 1" = 1'-0" (S-37)

NOTE:
DIMENSIONS FOR PLATES & WELDS IN DET. 3 ARE SAME AS IN DET. 2.
THIS BRACKET IS NOT TO BE TAIL [illegible] OF COLUMN LINE "E" ONLY.

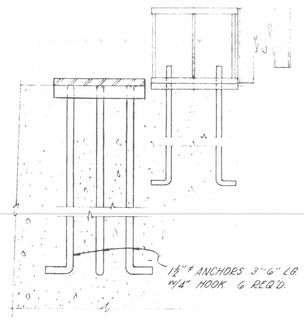

SECTION A
SCALE 1" = 1'-0"

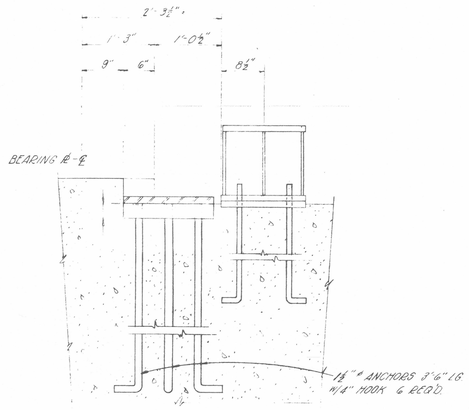

SECTION B
SCALE 1" = 1'-0"

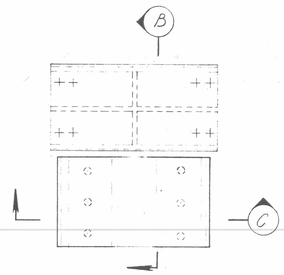

PLAN - TOP PLATE

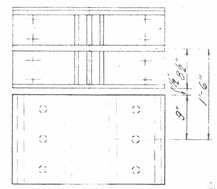

PLAN - BOTTOM PLATE

DETAIL 3 S-11
SCALE 1" = 1'-0" (S-37)

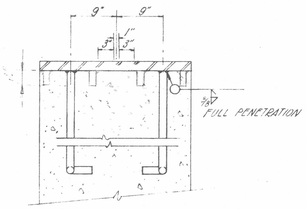

SECTION C
SCALE 1" = 1'-0"

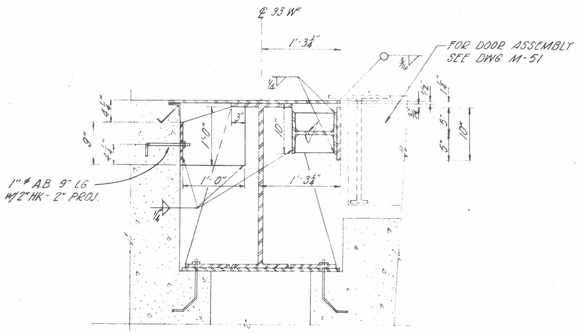

SECTION D
SCALE 1" = 1'-0"

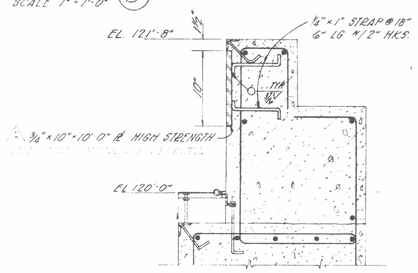

SECTION F S-11
SCALE 1 1/2" = 1'-0" (S-37)

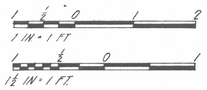

REVISION	DATE	DESCRIPTION	AGENCY	INIT.
2	8-19-61	[illegible]		
1	6-24-60	DELETE SECTION E PER MOD. NO. 24		

BECHTEL CORPORATION
ENGINEERS AND CONSTRUCTORS
SAN FRANCISCO — LOS ANGELES — NEW YORK

DEPARTMENT OF THE AIR FORCE
AIR FORCE BALLISTIC MISSILE DIVISION (ARDC)
INGLEWOOD, CALIFORNIA

		DATE
DESIGNED BY	KARAGOZIAN	11-27-59
DRAWN BY	SHIMAURA	11-27-59
CHECKED BY	R. Patterson	11-27-59
O. K.	M.R. Sanggo	11-27-59
O. K.	[illegible]	11-27-59
APPROVED BECHTEL CORP.	[illegible]	11-27-59

WS-107 A-I OPERATIONAL BASE
FORBES A.F.B. KANSAS
COMPLEX D,E,F,G,H&I
LAUNCH & SERVICE BUILDING
EMBEDDED STEEL DETAILS

APPROVED BY TCR

APPROVED — DATE — AFBMD

SPECIFICATION No. ENG. 45-108-59-66
DATE [illegible] 1959 SCALE AS NOTED
DRAWING NUMBER 3115 - 3 XI - S - 37 SHEET